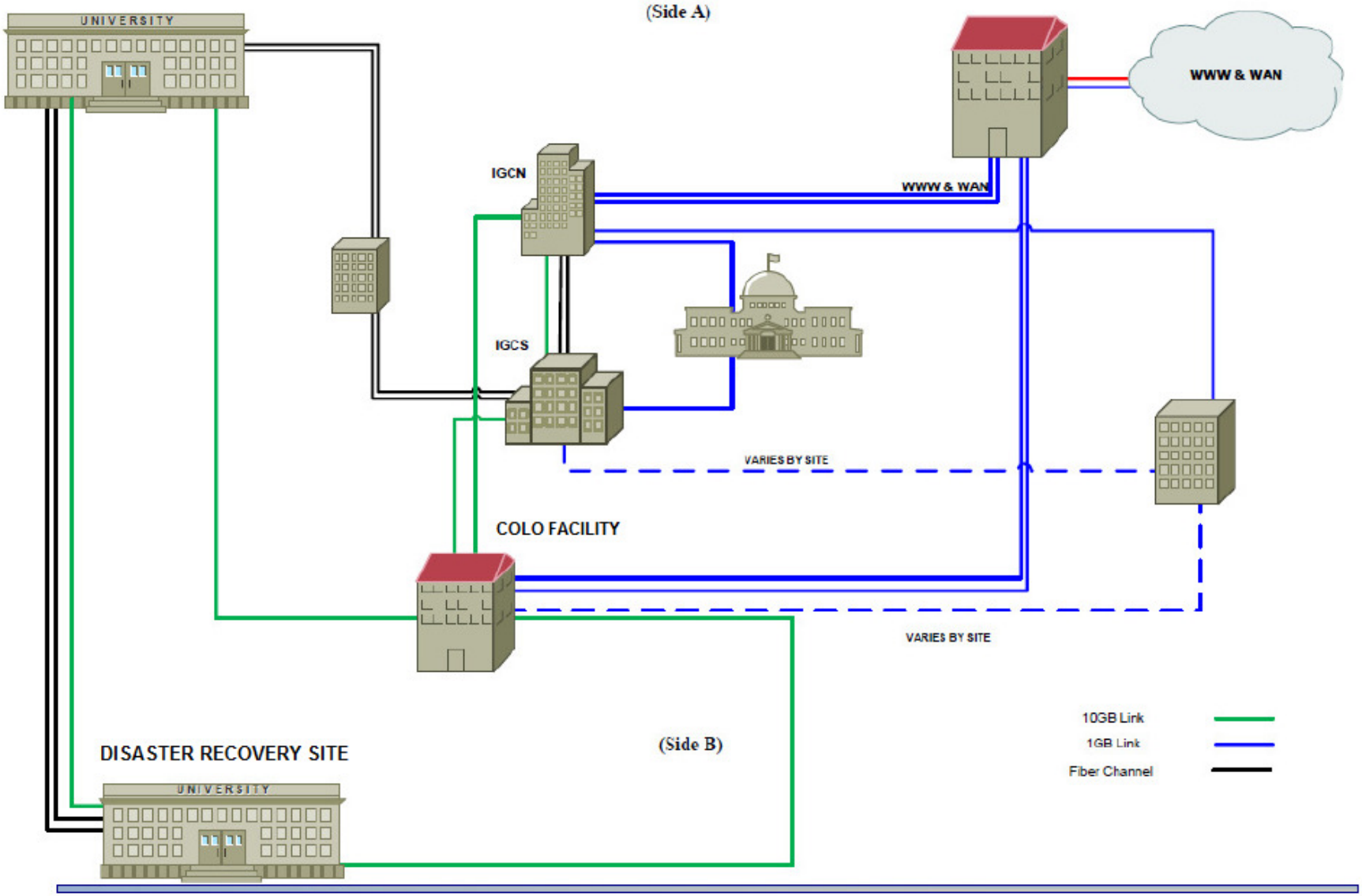State of Indiana –High Level Site Overview